Hillmar
Hillmar Industries Ltd.
7371 Vantage Way
Delta, BC V4G 1C9
P:604 946-7115 F:604 946-0329
info@hillmar.com www.hillmar.com

CABLE REEL VD DAVD GBSRFO
DAVD-1500-GB50SD-0610KVFO-280
SPECIFICATION SHEET
SLS & MKTG
ENGLISH

Sheet Number:	
Job Number:	
Form Number: 629-863-76976PT	

Company / Project Reference:	Date.:	Page.:	Document Package No.:	Rev.:

Inventor Drawing

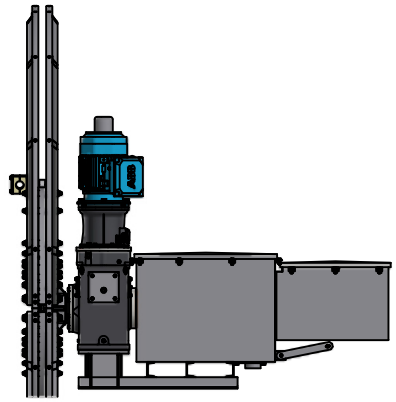

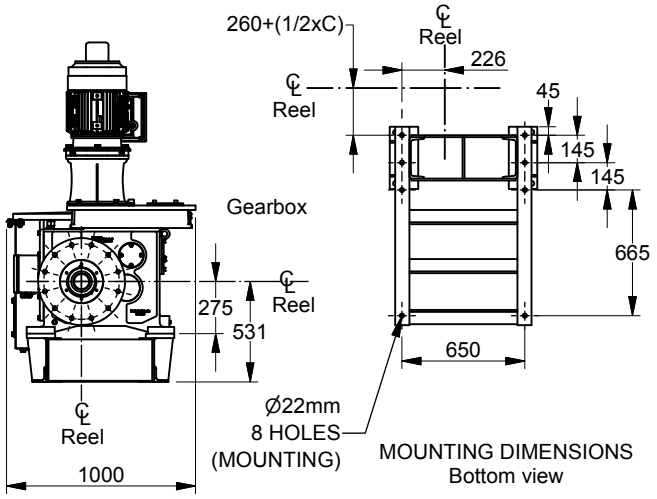

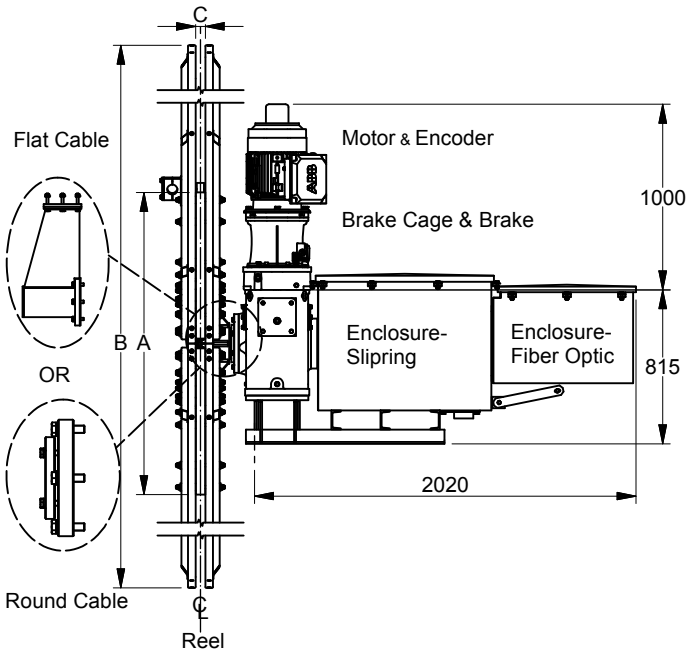

FEATURE	CODE
Drive Assy Vector Drive	DAVD
Vector Drive Motor Size	1500
Gearbox Single Drive	GB50SD
Voltage	0610KV
Fiber Optic	FO
Vector Drive Torque Nm	280

Example for ordering	DAVD-1500-GB50SD-0610KVFO-280

TECHNICAL DATA

Motor Size	15 kW
Spool Sizes Available	4.0m to 8.5m
Gearbox Hollow Shaft	90mm
Gearbox Drive Torque Nm	8000
Gearbox Max Overhang Load	75kN
Slipring Enclosure Design	06-10kV
Rotary Switch Ratio	RS
Drive Weight Excluding Spool	1010kg
Spool Weight	Contract Specific
Mounting Holes	8 x Ø22
Mounting Bolts	8 x M20 GR10.9
Slipring Enclosure	SS304

NOTES

For Other Reel Types refer to one of the following sections:

Flat Cable Reel

Hose Reel

Control Reel

Vector drive Reel

Document Template #710-101-62058

** ALL TECHNICAL DATA IS SUBJECT TO CHANGE WITHOUT NOTICE **
Hillmar works have a fully registered ISO 9001-2008 quality assurance programme (QCB #01-1525)

C:\TEMP\8718dff5-874f-4422-bec7-fec3dce60930\8000529492\HILLMAR\HILLMAR PRODUCTION\06 CABLE REEL\CABLE REEL DA\0700-6\07006005 DA-CRVD\SPC-SHT-DA-CRVD\76976 DAVD-1500-GB50SD-0610KVFO-280.idw